FIBER COUNT	PART NUMBER	DESCRIPTION	ACTIVE CHANNELS	WAVELENGTH
1X16	18318	Ferrule_PRIZM® MT_1X16_MM	16 CHANNELS, ROW C	-
	19883	Ferrule_PRIZM® MT_1X16_MM_850AR	16 CHANNELS, ROW C	850

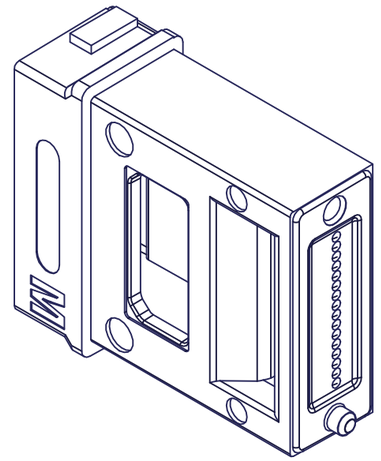

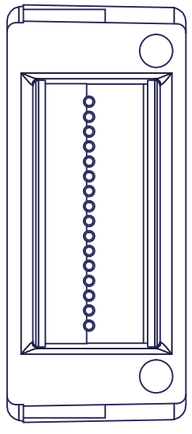

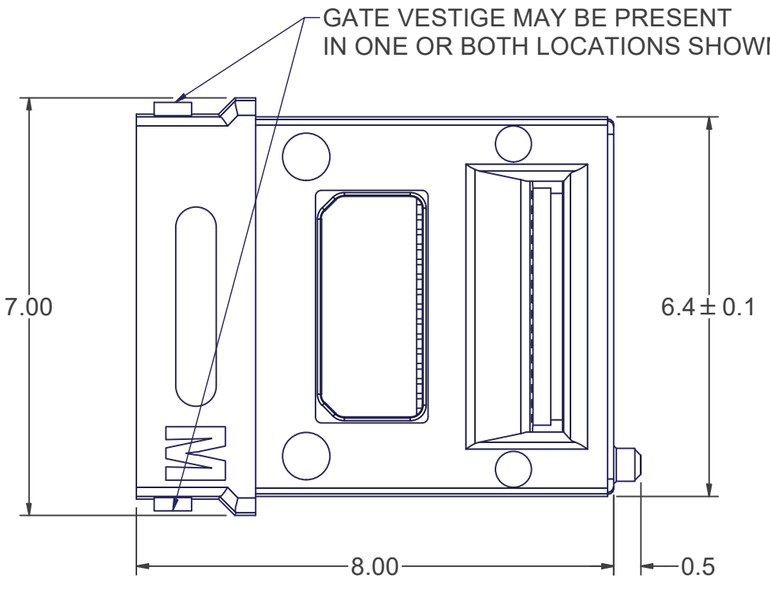

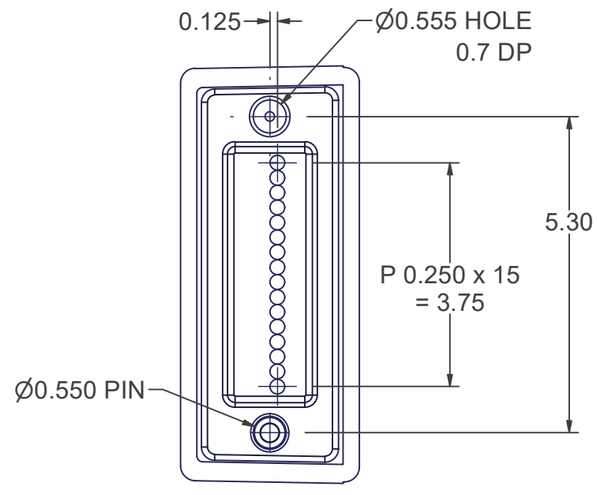

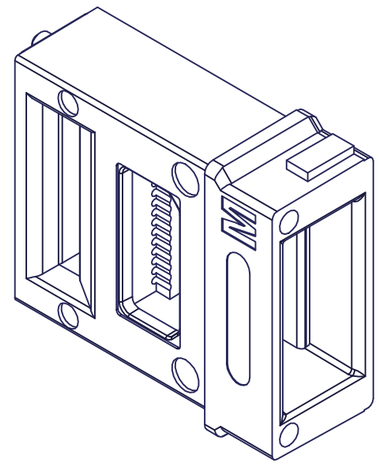

NOTES:
1. COLOR: TRANSPARENT
2. SEE SHEET 2 FOR LENS POSITION DIAGRAM

▲ DENOTES CRITICAL DIMENSION

USCONEC LTD. PROPRIETARY
THIS DOCUMENT AND THE ASSOCIATED DATA CONTAIN RESTRICTED INFORMATION THAT IS USCONEC LTD. PROPRIETARY. DISCLOSE OR DUPLICATE FOR OTHERS ONLY AS AUTHORIZED BY USCONEC LTD.

Material: MAT'L SPEC #C16653

REV.	DATE	DESCRIPTION	ECN
X1	7/13/18	-	01982
X2	8/7/19	REVISED NOTES	01982
A	10/16/19	INITIAL RELEASE	1982-rr
B	1/30/20	ADDED P/N TABLE	1982-bh
C1	9/3/20	ADDED GATE VESTIGE NOTE	2306-rr
C	12/08/20	RELEASE	2306-rr
D	7/20/22	OBSOLETE P/N's 21626	2179-mm

CUSTOMER DRAWING

DIMENSIONS FOR REFERENCE ONLY

THIRD ANGLE PROJECTION

METRIC/mm

USCONEC
Hickory, NC
800-769-0944
www.usconec.com

TITLE: FERRULE, PRIZM® MT, 1x16, MM, NO SPRING SEAT

SIZE	S&M Part No.:	DWG NO	REV
B	18318	C18318	D

SCALE	Drafter	Date:	SHEET
N.T.S.	B. HENLEY	7/13/2018	1 OF 2

ROW & LENS POSITIONS

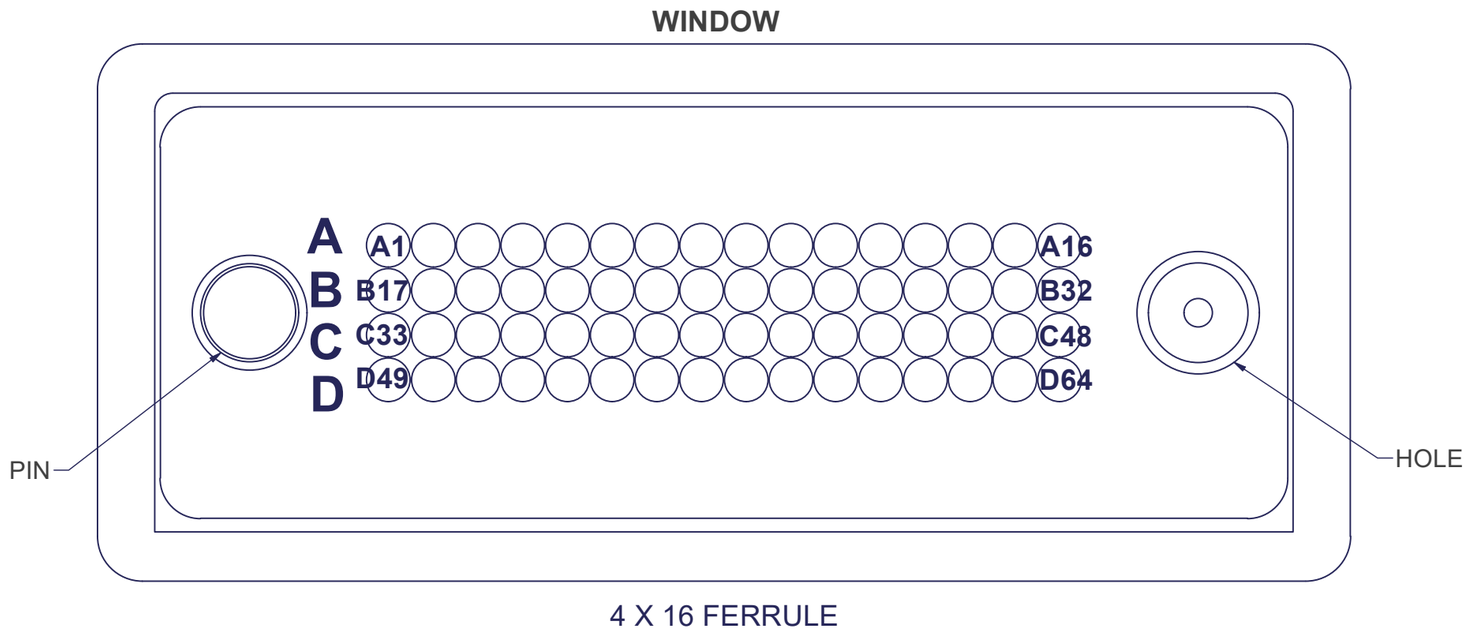

4 X 16 FERRULE

LENS POSITION DOESN'T CHANGE
REGARDLESS OF THE
NUMBER OF LENSES

- Use Row C for a 1 row Ferrule
- Use Rows B & C for a 2 row Ferrule
- Use Rows B, C, & D for a 3 row Ferrule

▲ DENOTES CRITICAL DIMENSION

USCONEC LTD. PROPRIETARY
THIS DOCUMENT AND THE ASSOCIATED DATA CONTAIN RESTRICTED INFORMATION THAT IS USCONEC LTD. PROPRIETARY. DISCLOSE OR DUPLICATE FOR OTHERS ONLY AS AUTHORIZED BY USCONEC LTD.

Material: MAT'L SPEC #C16653

REV.	DATE	DESCRIPTION	ECN

CUSTOMER DRAWING

DIMENSIONS FOR REFERENCE ONLY

THIRD ANGLE PROJECTION

METRIC/mm

USCONEC
Hickory, NC
800-769-0944
www.usconec.com

TITLE: FERRULE, PRIZM® MT, 1x16, MM, NO SPRING SEAT

SIZE	S&M Part No.:	DWG NO	REV
B	18318	C18318	D

SCALE	Drafter	Date:	SHEET	OF
N.T.S.	B. HENLEY	7/13/2018	2	2