FIBER COUNT	PART NUMBER	DESCRIPTION	ACTIVE CHANNELS	WAVELENGTH	DRAWING NUMBER
1X16	15298	Ferrule_PRIZM®MT_1X16_MM	16 CHANNELS, ROW C	-	C15298
	16804	Ferrule_PRIZM®MT_1X16_MM_850AR	16 CHANNELS, ROW C	850	C15298
2X12	16611	Ferrule_PRIZM®MT_2X12_MM	CENTER 12 CHANNELS, ROWS B & C	-	C16611
	16664	Ferrule_PRIZM®MT_2X12_MM_850AR	CENTER 12 CHANNELS, ROWS B & C	850	C16611
4X12	16523	Ferrule_PRIZM®MT_4X12_MM	CENTER 12 CHANNELS	-	C16523
	16283	Ferrule_PRIZM®MT_4X12_MM_850AR	CENTER 12 CHANNELS	850	C16523

NOTES:

1. FOR FERRULE DIMENSIONS AND MATERIAL REFER TO DRAWING NUMBER COLUMN IN TABLE.

2. SEE TABLE ON SHEET 2 FOR DESIGNATION OF ACTIVE CHANNELS.

▲ DENOTES CRITICAL DIMENSION

USCONEC LTD. PROPRIETARY
THIS DOCUMENT AND THE ASSOCIATED DATA CONTAIN RESTRICTED INFORMATION THAT IS USCONEC LTD. PROPERTY. DISCLOSE OR DUPLICATE FOR OTHERS ONLY AS AUTHORIZED BY USCONEC LTD.

Material: SEE NOTE 1

REV.	DATE	DESCRIPTION	ECN
C1	10/29/18	REMOVED OBSOLETE PART NUMBERS	02168-bh
C2	7/17/19	REVISED TABLE AND P/NS	02168-bh
C3	12/19/19	REVISED TABLE AND P/NS	02168-bh
C	1/9/20	RELEASE	2168-rr
D1	5/17/21	OBSOLETE 2X16 PMTs 15392 & 18859	2380-mm
D	5/17/21	RELEASE	

CUSTOMER DRAWING

DIMENSIONS FOR REFERENCE ONLY

THIRD ANGLE PROJECTION

METRIC/mm

USCONEC
Hickory, NC
800-769-0944
www.usconec.com

TITLE FERRULE, PRIZM®MT, REFERENCE TABLE

SIZE	S&M Part No.:	DWG NO	REV
B	SEE TABLE	C15555	D

SCALE	Drafter	Date:	SHEET	OF
N.T.S.	B. HENLEY	10/24/2016	1	2

ROW & LENS POSITIONS

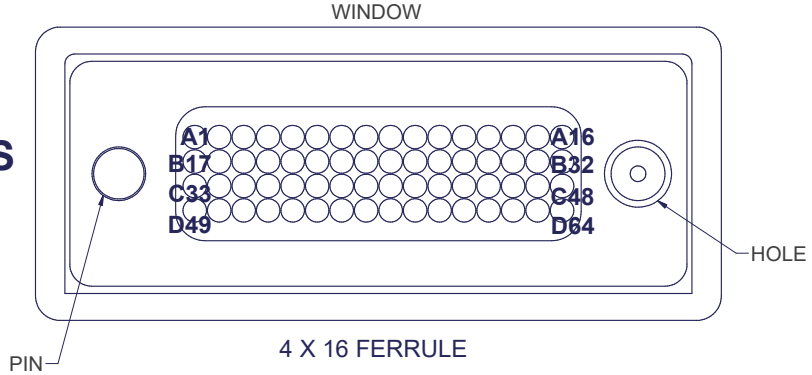

LENS POSITION DOESN'T CHANGE
REGARDLESS OF THE
NUMBER OF LENSES

- Use Row C for a 1 row Ferrule
- Use Rows B & C for a 2 row Ferrule
- Use Rows B, C, & D for a 3 row Ferrule

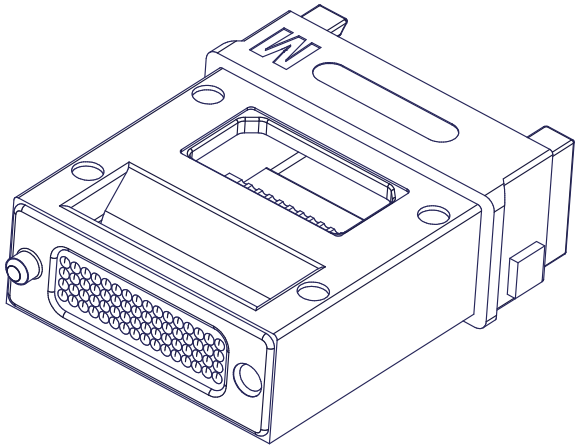

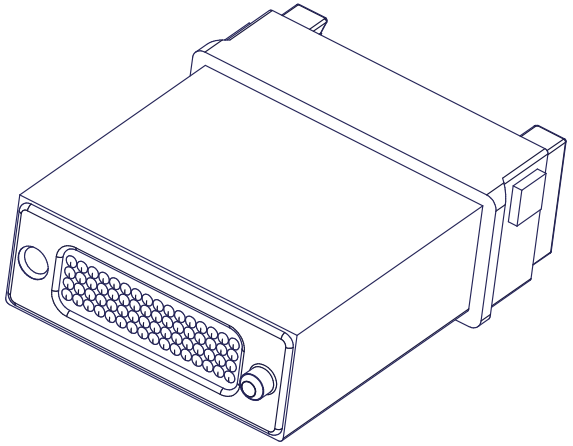

▲ DENOTES CRITICAL DIMENSION

USCONEC LTD. PROPRIETARY
THIS DOCUMENT AND THE ASSOCIATED DATA CONTAIN RESTRICTED INFORMATION THAT IS USCONEC LTD. PROPERTY. DISCLOSE OR DUPLICATE FOR OTHERS ONLY AS AUTHORIZED BY USCONEC LTD.

Material: SEE NOTE 1

REV.	DATE	DESCRIPTION	ECN

CUSTOMER DRAWING
DIMENSIONS FOR REFERENCE ONLY

THIRD ANGLE PROJECTION

METRIC/mm

USCONEC
Hickory, NC
800-769-0944
www.usconec.com

TITLE FERRULE, PRIZM®MT, REFERENCE TABLE

SIZE	S&M Part No.:	DWG NO	REV
B	SEE TABLE	C15555	D

SCALE	Drafter	Date:	SHEET	OF
N.T.S.	B. HENLEY	10/24/2016	2	2