Parts List			
ITEM	QTY	PART NUMBER	DESCRIPTION
1	1	14872	LOCK, 900µm
2	1	14869	TRANSITION, 900µm
3	1	15159	BOOT, TRANSITION, 900um CONN.

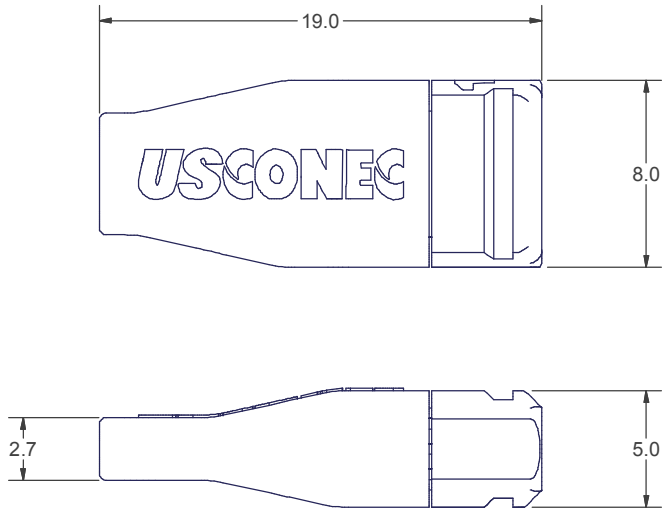

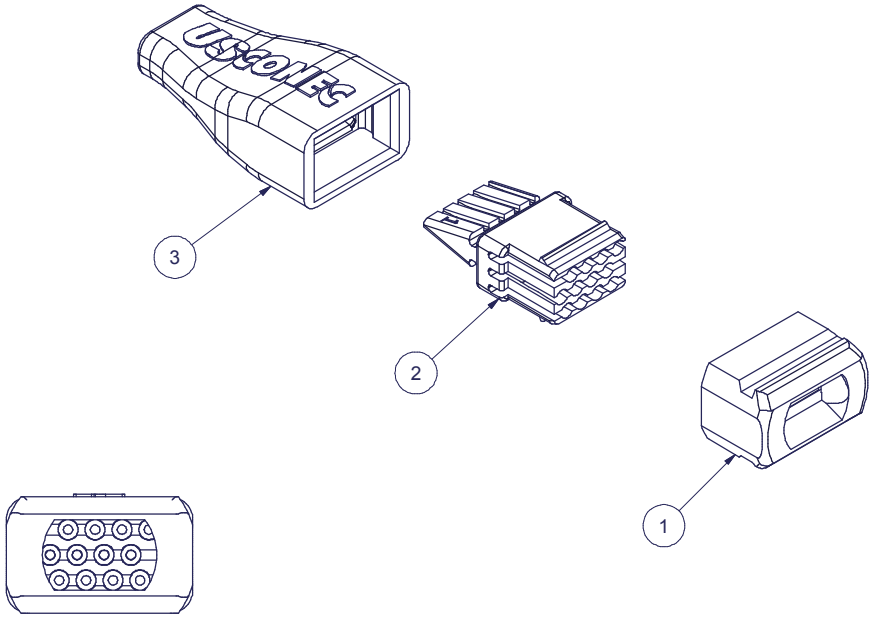

ASSEMBLED VIEWS

▲ DENOTES CRITICAL DIMENSION

USCONEC LTD. PROPRIETARY
THIS DOCUMENT AND THE ASSOCIATED DATA CONTAIN RESTRICTED INFORMATION THAT IS USCONEC LTD. PROPERTY. DISCLOSE OR DUPLICATE FOR OTHERS ONLY AS AUTHORIZED BY USCONEC LTD.

Material:

REV.	DATE	DESCRIPTION	ECN
X1	4/19/13	–	01542
X2	3/20/14	REVISED VIEWS TO SHOW LOGO	1542-my
A	4/21/14	INITIAL RELEASE	1542-mm
---	4/22/14	REMOVED 'CONNECTOR' FROM TITLE	1542-mm

CUSTOMER DRAWING

DIMENSIONS FOR REFERENCE ONLY

THIRD ANGLE PROJECTION

METRIC/mm

USCONEC
Hickory, NC
800-769-0944
www.usconec.com

TITLE KIT, 900µm to RIBBON

SIZE	S&M Part No.:	DWG NO	REV
B	15323	C15323	A

SCALE	Drafter	Date:	SHEET
N.T.S.	G. WOLF	4/19/2013	1 OF 1