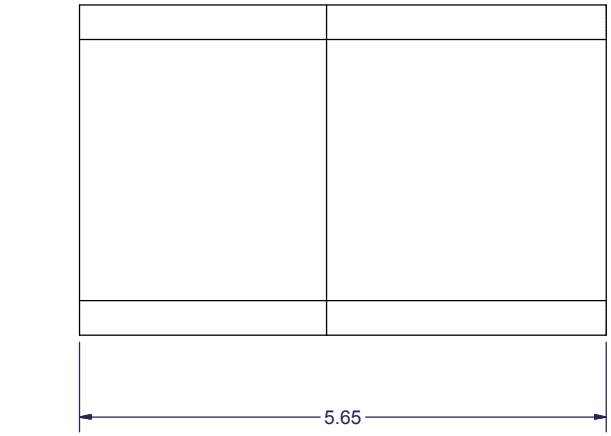

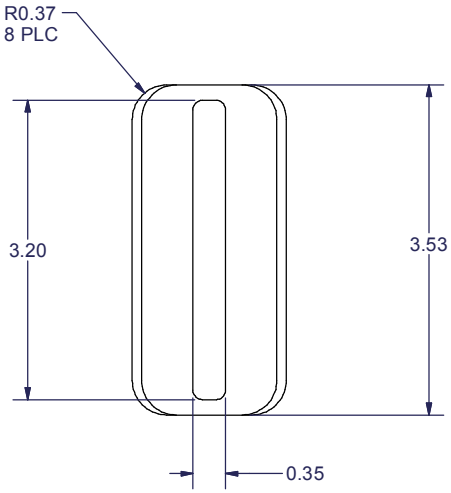

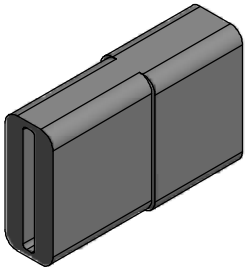

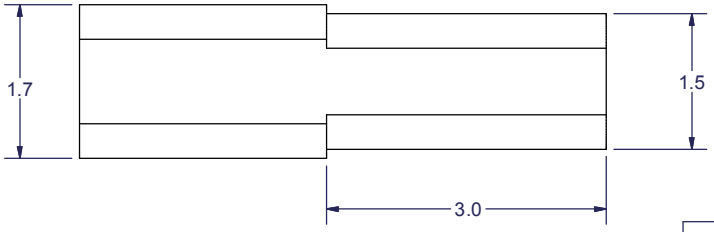

NOTES:

1. COLOR: BLACK

▲ DENOTES CRITICAL DIMENSION

USCONEC LTD. PROPRIETARY
THIS DOCUMENT AND THE ASSOCIATED DATA CONTAIN RESTRICTED INFORMATION THAT IS USCONEC LTD. PROPERTY. DISCLOSE OR DUPLICATE FOR OTHERS ONLY AS AUTHORIZED BY USCONEC LTD.

Material: TPE - MATERIAL SPEC #C13480

REV.	DATE	DESCRIPTION	ECN
D	6/3/11	RELEASE	01289
E1	3/22/12	REMOVE P/N 9853	01313
E	4/23/12	RELEASE	01313
F1	11/24/15	REVISE DIMS TO BETTER MATCH AS-MOLDED: 5.65 w 5.5; 0.37 w 0.36; 3.53 w 3.52	1511-my
F	12/10/15	RELEASE	1511-mm

CUSTOMER DRAWING

DIMENSIONS FOR REFERENCE ONLY

THIRD ANGLE PROJECTION

METRIC/mm

USCONEC
Hickory, NC
800-769-0944
www.usconec.com

TITLE BOOT, MT, 12 FIBER FERRULE

SIZE	S&M Part No.:	DWG NO	REV
B	200002-01	C10464	F

SCALE	Drafter	Date:	SHEET
N.T.S.	F. COPE	1/24/2001	1 OF 1