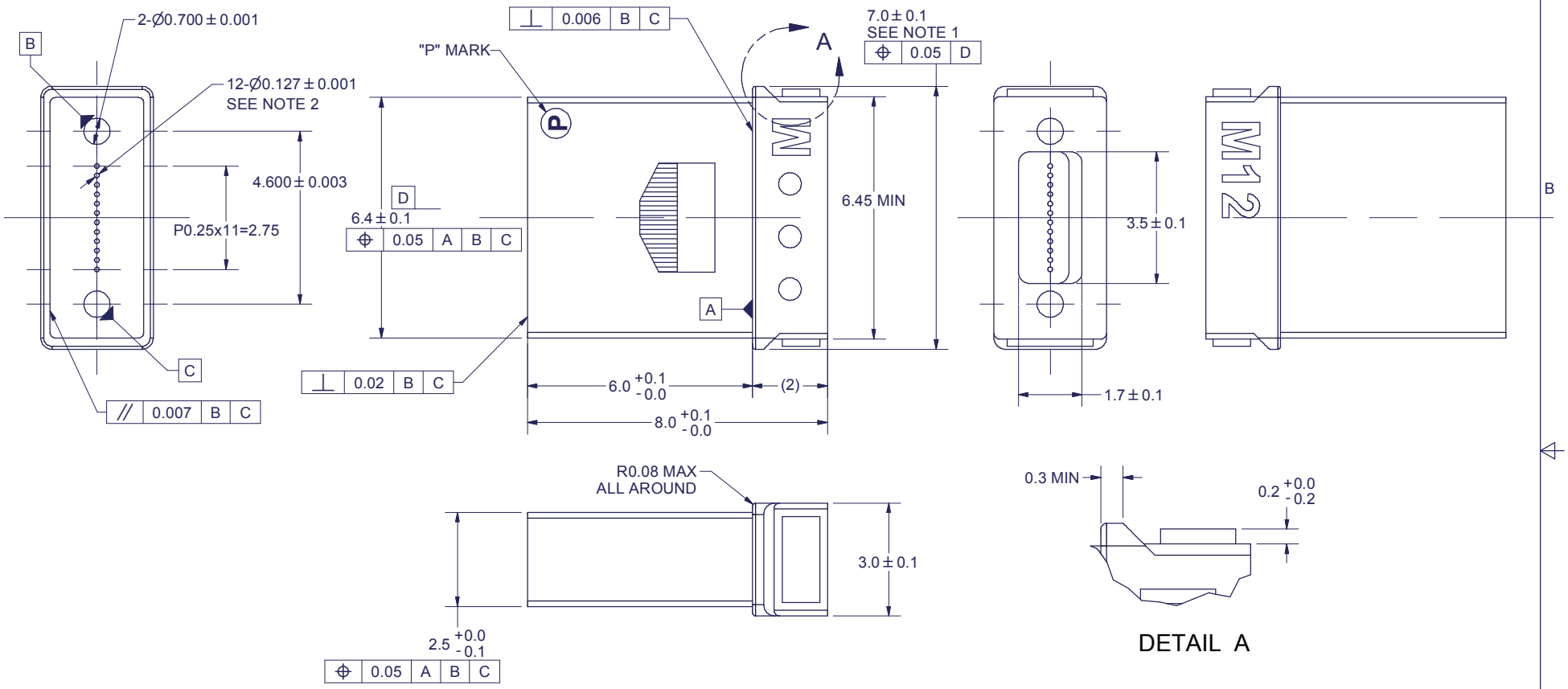

▲ DENOTES CRITICAL DIMENSION

NOTES:

1. DIMENSION TO BE HELD FOR LENGTH OF 0.3MIN FROM FRONT SHOULDER. REMAINDER TO BE FLUSH OR BELOW SURFACE , DOWN TO 6.45 MIN.

2. FIBER HOLE ECCENTRICITY : 3.0µm MAX
FIBER HOLE TILT : 1° MAX

USCONEC LTD. PROPRIETARY
THIS DOCUMENT AND THE ASSOCIATED DATA CONTAIN RESTRICTED INFORMATION THAT IS USCONEC LTD. PROPERTY. DISCLOSE OR DUPLICATE FOR OTHERS ONLY AS AUTHORIZED BY USCONEC LTD.

Material: POLYPHENYLENE SULFIDE

REV.	DATE	DESCRIPTION	ECN
C	09/29/00	RELEASED TO SALES	XXXXX
D	02/16/01	ADDED "P" MARK AND DIM. FORMAT CHG.'S	00002

CUSTOMER DRAWING
DIMENSIONS FOR REFERENCE ONLY
THIRD ANGLE PROJECTION
METRIC/mm

USCONEC
Hickory, NC
800-769-0944
www.usconec.com

TITLE FERRULE, MT, MULTIMODE, 12 FIBER

SIZE	S&M Part No.:	DWG NO	REV
B	MTF-12MM7-02-NBC	C10361	D

SCALE	Drafter	Date:	SHEET
N.T.S.	MCB	9/29/2000	1 OF 1