PART NO.	COLOR
MTP-A12-02	BLACK
MTP-A12-11	BEIGE
MTP-A12-12	GREEN
MTP-A12-15	MUSTARD
7871	AQUA
8497	BLUE
13949	MAGENTA
16693	HEATHER VIOLET
16791	MUNSELL VIOLET

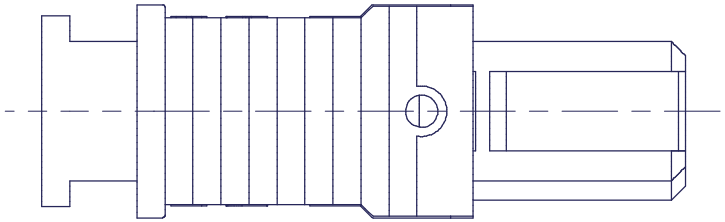

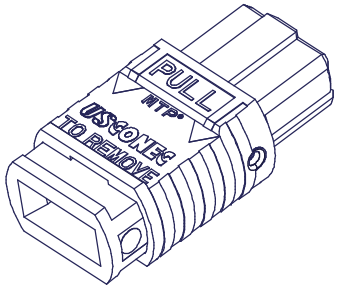

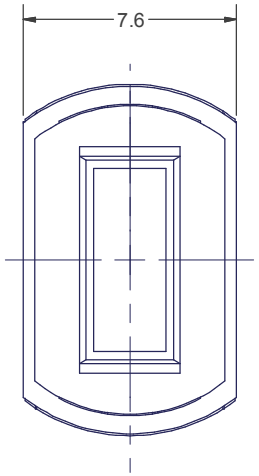

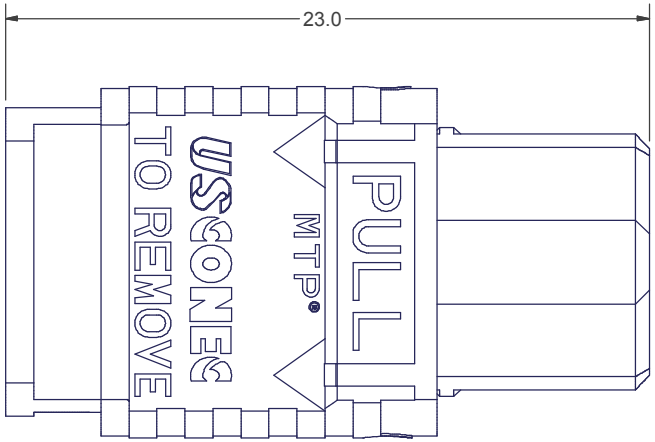

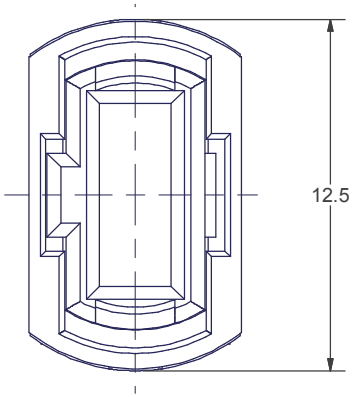

▲ DENOTES CRITICAL DIMENSION

USCONEC LTD. PROPRIETARY
THIS DOCUMENT AND THE ASSOCIATED DATA CONTAIN RESTRICTED INFORMATION THAT IS USCONEC LTD. PROPERTY. DISCLOSE OR DUPLICATE FOR OTHERS ONLY AS AUTHORIZED BY USCONEC LTD.

Material: N/A

REV.	DATE	DESCRIPTION	ECN
D	5/16/05	ADDED NEW P/N TO CHART	00679
E1	10/13/11	ADDED P/N'S 8497 AND 13949 TO CHART	01377
E	10/17/11	RELEASE	01377
F1	4/27/15	ADDED (Heather Violet) PN 16693 & (Munsell Violet) PN 16791	1803-mm
F	8/26/15	RELEASE	1803-mm

CUSTOMER DRAWING

DIMENSIONS FOR REFERENCE ONLY

THIRD ANGLE PROJECTION

METRIC/mm

USCONEC
Hickory, NC
800-769-0944
www.usconec.com

TITLE ASSEMBLY, HOUSING, MTP®

SIZE	S&M Part No.:	DWG NO	REV
B	SEE CHART	C10074	F

SCALE	Drafter	Date:	SHEET
N.T.S.	F. COPE	7/30/2001	1 OF 1